TUTORIAL-4 PHY102 23/01/2016

1. Find the work done in moving a particle around a circle C in the x-y plane, if the circle has a center at origin and radius 3 and if the force field is given by

$$\vec{F} = (2x - y + z)\hat{i} + (x + y - z^2)\hat{j} + (3x - 2y + 4z)\hat{k}$$

Ans. In the plane $z = 0$, $\vec{F} = (2x - y)\hat{i} + (x + y)\hat{j} + (3x - 2y)\hat{k}$ and $d\vec{r} = \hat{i}\,dx + \hat{j}\,dy + \hat{k}\,dz$ so that the work done is $\int_C \vec{F}\cdot d\vec{r} = \int_C [(2x - y)\,dx + (x + y)\,dy]$. We can choose C as the path traversed in a circle in a counterclockwise sense.

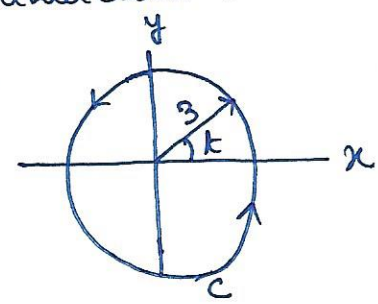

Choose the parametric eqs of the circle as $x = 3\cos t$, $y = 3\sin t$ where t varies from 0 to 2π.

$$W = \int_C \vec{F}\cdot d\vec{r} = \int_{t=0}^{2\pi} [(2(3\cos t) - 3\sin t)(-3\sin t)\,dt + (3\cos t + 3\sin t)(3\cos t)\,dt$$

$$= \int_0^{2\pi} (9 - 9\sin t\cos t)\,dt = 9t - \frac{9}{2}\sin^2 t \Big|_0^{2\pi} = \underline{18\pi}$$

Note that if C ~~were~~ was traversed in clockwise direction, the value of the integral would have been -18π.

Note also that instead of using parametric eqs, you could have substituted $y = +\sqrt{3 - x^2}$ and take the limit of x from $+3$ to -3 (covering upper ~~hem~~ semicircle) and then again substitute $y = -\sqrt{3 - x^2}$ and ~~substitute~~ vary x from -3 to $+3$ (covering lower semicircle).

Both are equivalent

2. Find out the flux of the vector field $\vec{A} = 4x\hat{i} - 2y^2\hat{j} + z^2\hat{k}$ taken over the region bounded by $x^2+y^2 = 4$ and $z=0$, $z=3$, that is a closed cylinder with a circular top & base of radius

2.

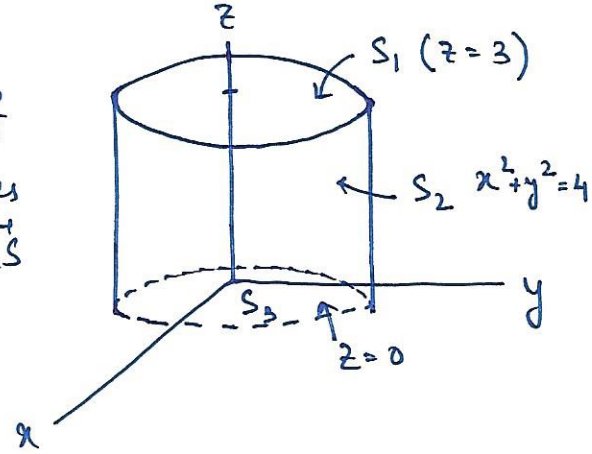

Flux is given by the surface integral of the vector function $\vec{A}$ through surfaces S_1, S_2 and S_3

$$\iint_S \vec{A}\cdot d\vec{S} = \iint_{S_1} \vec{A}\cdot d\vec{S} + \iint_{S_2} \vec{A}\cdot d\vec{S} + \iint_{S_3} \vec{A}\cdot d\vec{S}$$

<u>On S_1</u> $(z=3)$

$\hat{n} = \hat{k}$ (unit vector of area normal)

$$\iint_{S_1} \vec{A}\cdot d\vec{S} = \iint_{S_1} \vec{A}\cdot \hat{n}\, dS = \iint_{S_1} z^2\, dS \quad [\because \vec{A}\cdot\hat{n} = \vec{A}\cdot\hat{k} = z^2]$$

$$= 3^2 \iint_{S_1} dS \quad [\because z=3] \quad = 9\cdot(\pi\cdot 2^2) = 36\pi$$

<u>On S_2</u>: We have to evaluate $\iint_{S_2} \vec{A}\cdot d\vec{S}_2 = \iint_{S_2} \vec{A}\cdot\hat{n}\, dS_2$

A perpendicular to $x^2+y^2=4$ has direction $\vec{\nabla}(x^2+y^2-4)$
$= 2x\hat{i} + 2y\hat{j}$

Unit normal perpendicular to surface of $x^2+y^2=4$

is $\dfrac{2x\hat{i} + 2y\hat{j}}{\sqrt{4(x^2+y^2)}} = \dfrac{x}{2}\hat{i} + \dfrac{y}{2}\hat{j} \quad [\because x^2+y^2 = 2^2]$

$\therefore \vec{A}\cdot\hat{n} = (2x^2 - y^3)$

$$\iint_{S_3} \vec{A}\cdot\hat{n}\, dS = \iint_{S_3} (2x^2 - y^3)\, dS$$

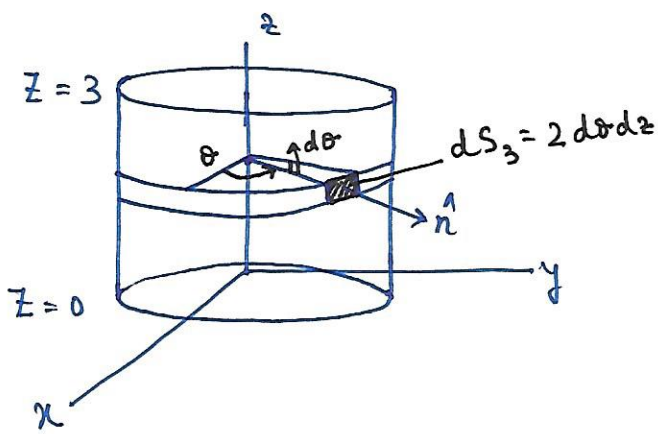

To solve the integral, it is useful to realize the elementary surface dS_3 on S_3 – it is clear that in polar co-ordinates (r, θ), $dS_3 = r\,d\theta\,dz = 2\,d\theta\,dz$

Substitute $x = r\cos\theta = 2\cos\theta$

$y = r\sin\theta = 2\sin\theta$

$$\therefore \iint_{S_3} \vec{A}\cdot\hat{n}\,dS = \iint_{\theta\,z} \left[2\,(4\cos^2\theta) - 8\sin^3\theta\right].\,2\,d\theta\,dz$$

$$= 16 \iint_{\theta\,.\,z} (\cos^2\theta - \sin^3\theta)\,d\theta\,dz$$

Here limits of integration are from $z=0$ to 3 and $\theta = 0$ to 2π. For double integrals, it is important to judge which integral should be carried first. For e.g, in this case, since the z-integration returns a constant, we should proceed with first with z-integration. Above integral can be written as,

$$16 \int_{\theta} (\cos^2\theta - \sin^3\theta)\,d\theta \int_{z=0}^{3} dz$$

$$= 16 \times 3 \int_{\theta=0}^{2\pi} (\cos^2\theta - \sin^3\theta)\,d\theta$$

Using standard integral formulas for ~~double~~ squares and cubes of angle of trigonometric functions, i.e

$$\int \sin^3 x\,dx = \frac{1}{3}\cos^3 x - \cos x$$

$$\int \cos^3 x\,dx = \sin x - \frac{1}{3}\sin^3 x$$

$$2\cos^2\theta = (1 + \cos 2\theta).$$

The above integral turns out to be $\underline{48\pi}$

<u>For surface S_3 $(z=0)$</u>

$\hat{n} = -\hat{k}$ $\quad \vec{A}\cdot\hat{n} = -z^2 = 0$ $[\because z=0]$. $\therefore \iint_{S_3} \vec{A}\cdot n\,dS = 0$

~~Therefore~~

The net flux is $\iint_S \vec{A}\cdot d\vec{S} = \iint_{S_1} \vec{A}\cdot d\vec{S} + \iint_{S_2} \vec{A}\cdot d\vec{S} + \iint_{S_3} \vec{A}\cdot d\vec{S}$

$$= 36\pi + 48\pi + 0$$

$$= \underline{84\pi} \quad \text{(Answer)}$$

3. Suppose you wanted to calculate the volume of a spherical ball of radius R centered at origin (for some reason, you didn't know that the volume was $\frac{4}{3}\pi R^3$). From divergence theorem, if you could find a vector field $\vec{F}$ so that $\vec{\nabla}\cdot\vec{F} = 1$, then both integrals in the divergence theorem would give the volume V. Try this with $\vec{F} = (\frac{x}{3})\hat{i} + (\frac{y}{3})\hat{j} + (\frac{z}{3})\hat{k}$ and calculate the volume V of the sphere by evaluating the surface integral giving the flux of $\vec{F}$ through the surface enclosing the volume **S**.

Divergence theorem says,

$$\iiint_V (\vec{\nabla}\cdot\vec{F})\, dV = \iint_S \vec{F}\cdot d\vec{S} \quad \text{[S is the } \underline{\text{closed}} \text{ surface enclosing volume V]}$$

If $\vec{\nabla}\cdot\vec{F} = 1$, $\iiint_V dV = V = \iint_S \vec{F}\cdot d\vec{S}$. We have to calculate $\iint_S \vec{F}\cdot d\vec{S}$.

<u>Method 1</u>: Use spherical polar co-ordinates

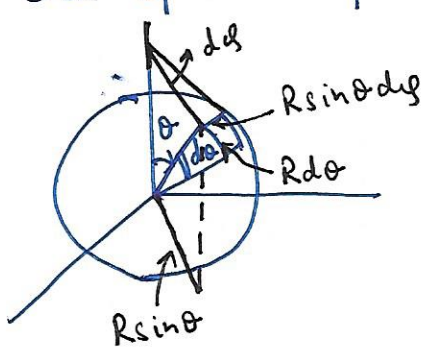

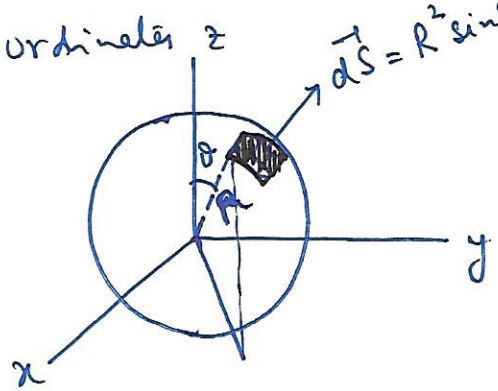

Here $\hat{r} = \dfrac{\vec{r}}{|r|} = \dfrac{x\hat{i} + y\hat{j} + z\hat{k}}{\sqrt{x^2+y^2+z^2}} = \dfrac{x}{R}(\hat{i}) + \dfrac{y}{R}(\hat{j}) + \dfrac{z}{R}(\hat{k})$

[$\hat{r}$ = unit vector normal to area element dS]

$\vec{F} \cdot \vec{dS}$

$= \vec{F} \cdot dS\,\hat{r}$

$= \dfrac{dS}{3R}(x^2+y^2+z^2) = \dfrac{dS}{3R} R^2 = \dfrac{R}{3} \cdot dS \left[\because x^2+y^2+z^2 = R^2\right]$

$$\iint_S \vec{F} \cdot \vec{dS} = \frac{R}{3} \iint dS = \frac{R}{3} \int_{\theta=0}^{\pi} R^2 \sin\theta\, d\theta \int_{\varphi=0}^{2\pi} d\varphi$$

$$= \frac{4}{3}\pi R^3$$

<u>Method 2:</u> (Projection method)

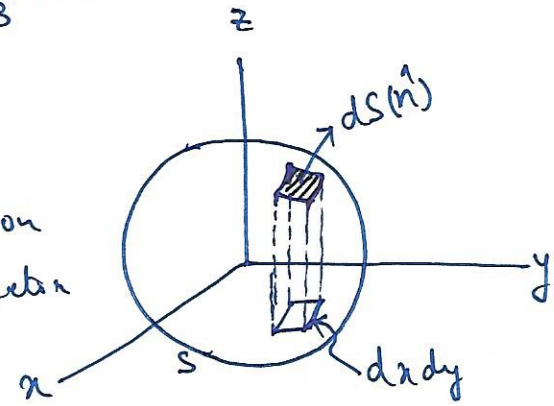

Consider elementary surface dS on surface of sphere – project dS on x-y plane. If $\hat{n}$ is normal vector to dS

$\vec{dS} \cdot \hat{k} = dx\,dy$

$dS\,\hat{n} \cdot \hat{k} = dx\,dy \Rightarrow dS = \dfrac{dx\,dy}{|\hat{n} \cdot \hat{k}|}$

$$\iint_S \vec{F} \cdot \vec{dS} = \iint_S \vec{F} \cdot \hat{n}\, dS = \iint_R \vec{F} \cdot \hat{n} \frac{dx\,dy}{|\hat{n} \cdot \hat{k}|}$$

(integration over surface S)

(integration over R in x-y plane)

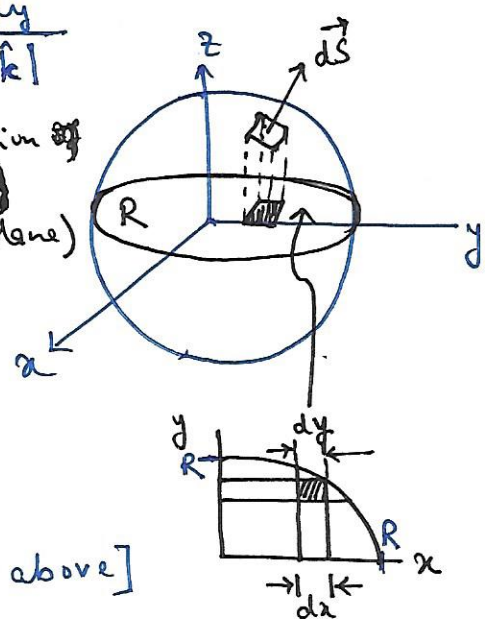

The normal vector to area element dS is given by

$\vec{n} = \vec{\nabla}(x^2+y^2+z^2) = 2x\hat{i} + 2y\hat{j} + 2z\hat{k}$

$\hat{n} = \dfrac{2x\hat{i} + 2y\hat{j} + 2z\hat{k}}{2\sqrt{x^2+y^2+z^2}} = \dfrac{x}{R}\hat{i} + \dfrac{y}{R}\hat{j} + \dfrac{z}{R}\hat{k}$

[same as above]

$$\vec{F}\cdot\hat{n} = \left(\frac{x}{3}\hat{i} + \frac{y}{3}\hat{j} + \frac{z}{3}\hat{k}\right)\cdot\left(\frac{x}{R}\hat{i} + \frac{y}{R}\hat{j} + \frac{z}{R}\hat{k}\right)$$

$$= \frac{1}{3R}(x^2+y^2+z^2) = \frac{R^2}{3R} = \frac{R}{3}, \text{ and } \hat{n}\cdot\hat{k} = \frac{z}{R}$$

$$V = \iint_R \vec{F}\cdot\hat{n}\,\frac{dx\,dy}{|\hat{n}\cdot\hat{k}|} = \frac{R}{3}\cdot\iint \frac{dx\,dy}{(z/R)}$$

$$= \frac{R^2}{3}\iint \frac{dx\,dy}{z}.$$ Integral variables are x and y but integrand is a function of z – write $z = z(x,y)$

$$V = \frac{R^2}{3}\int_x\int_y \frac{dx\,dy}{\sqrt{R^2-x^2-y^2}} \times 8 \text{ (eight octants)}$$

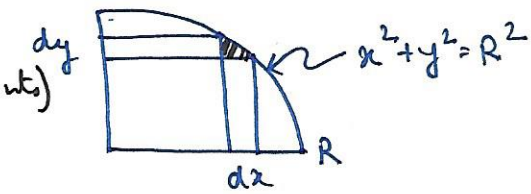

To evaluate this integral, y should be varied from 0 to $\sqrt{R^2-x^2}$ and then x to be varied from 0 to R

$$= \frac{8R^2}{3}\int_{x=0}^{R} dx \int_{y=0}^{\sqrt{R^2-x^2}} \frac{dy}{\sqrt{R^2-x^2-y^2}}.$$ Let us evaluate the y integral

$$\int_{y=0}^{\sqrt{R^2-x^2}} \frac{dy}{\sqrt{R^2-x^2-y^2}}.$$ To solve this integral we need to make a variable transformation.

Let $y = \sqrt{R^2-x^2}\,\sin\alpha$

$dy = \sqrt{R^2-x^2}\,\cos\alpha\,d\alpha$

$y = 0 \Rightarrow \alpha = 0$

$y = \sqrt{R^2-x^2} \Rightarrow \alpha = \pi/2$

$$= \int_0^{\pi/2} \frac{\sqrt{R^2-x^2}\,\cos\alpha\,d\alpha}{\sqrt{R^2-x^2}\,\cos\alpha} = \frac{\pi}{2}$$

Thus $$V = \frac{8R^2}{3}\times\frac{\pi}{2}\int_0^R dx = \frac{4}{3}\pi R^3$$

Answer